ONE GR

ASSEMBLY GUIDE.

Reebok
ONE SERIES

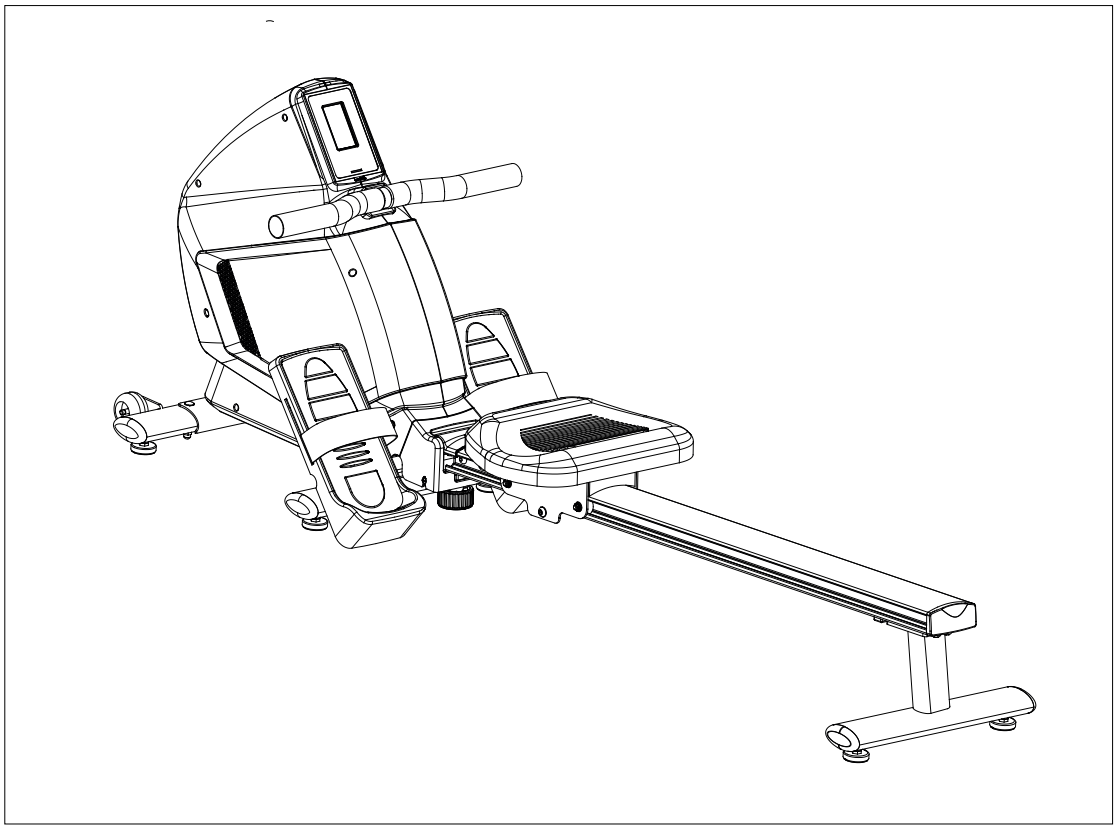

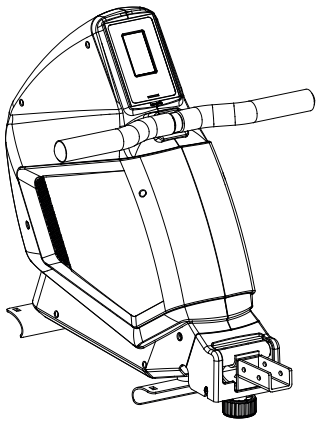	1	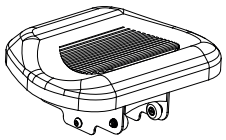	1
		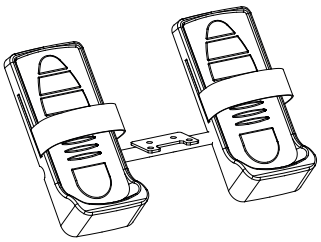	1
		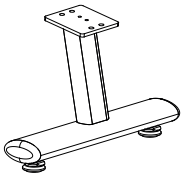	1
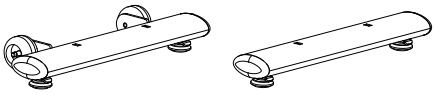	1/1		1/1
	1	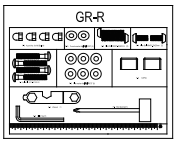 USER'S MANUAL	1/1

GR-R

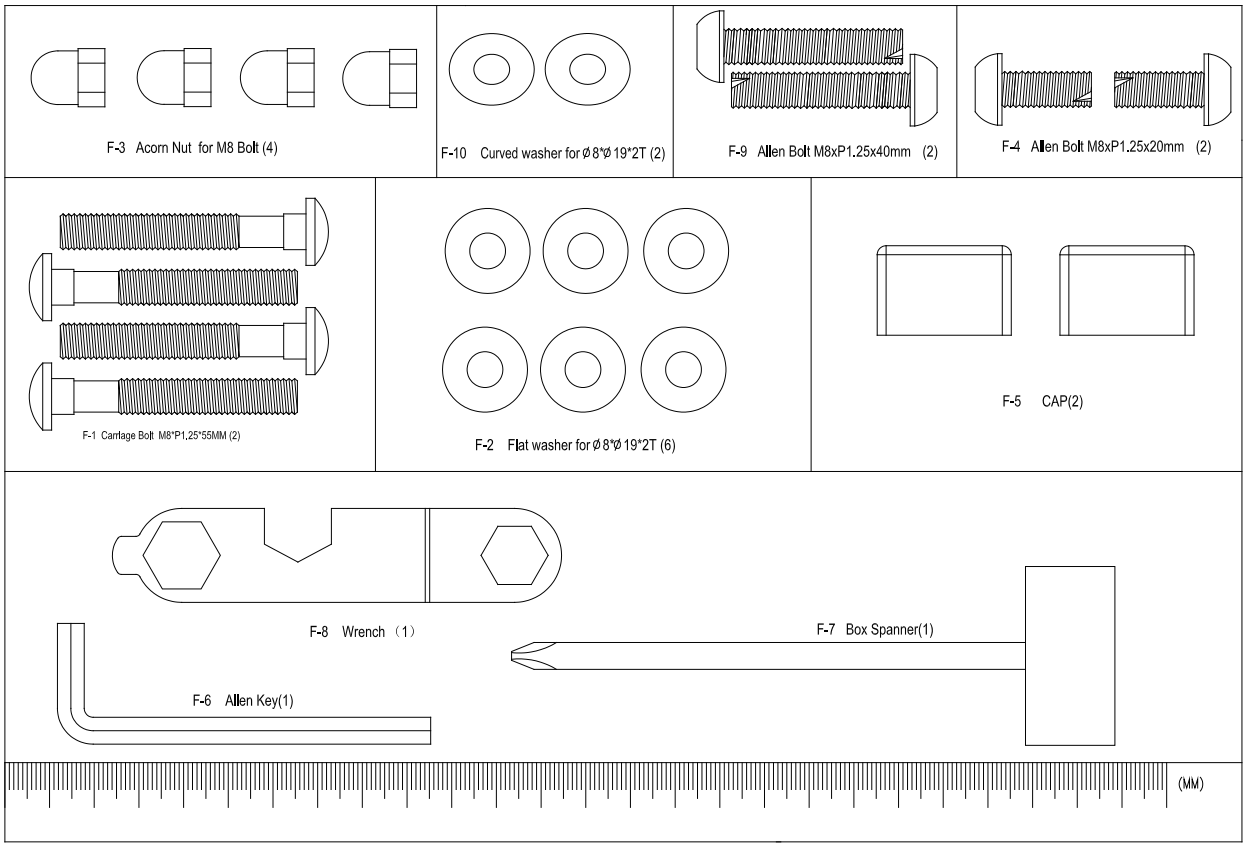
F-3 Acorn Nut for M8 Bolt (4)
F-10 Curved washer for Ø 8*Ø 19*2T (2)
F-9 Allen Bolt M8xP1.25x40mm (2)
F-4 Allen Bolt M8xP1.25x20mm (2)
F-1 Carriage Bolt M8*P1.25*55MM (2)
F-2 Flat washer for Ø 8*Ø 19*2T (6)
F-5 CAP(2)
F-8 Wrench（1）
F-7 Box Spanner(1)
F-6 Allen Key(1)
(MM)

1

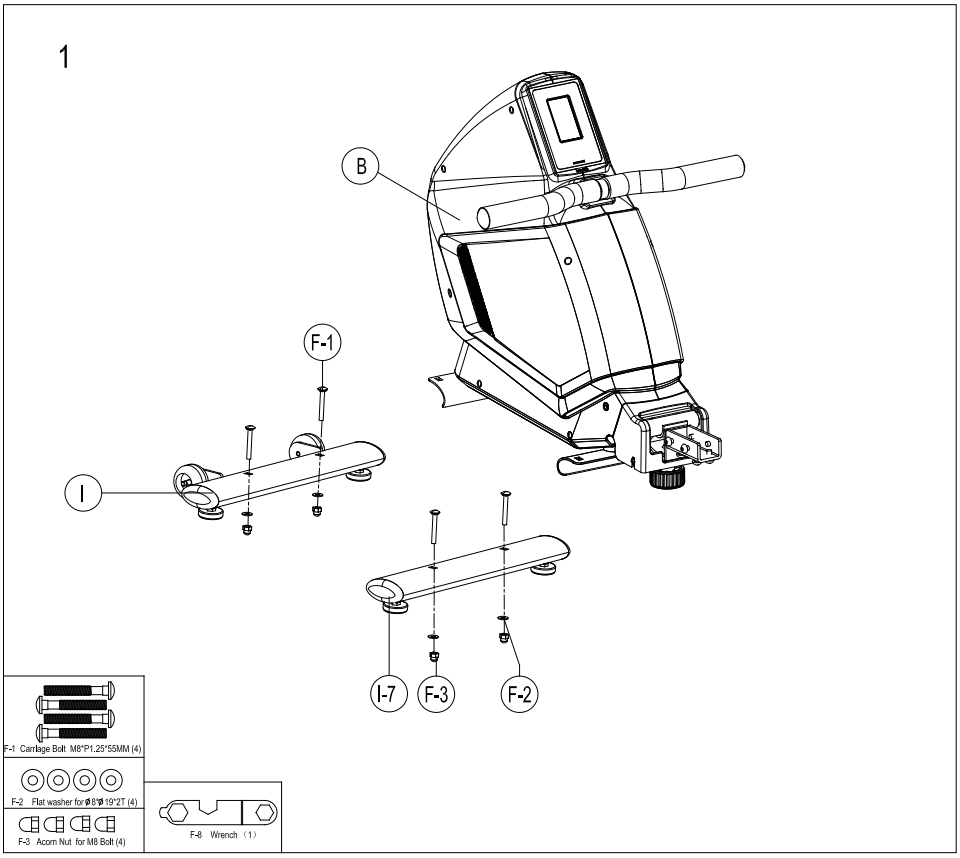
B
F-1
I
I-7
F-3
F-2
F-1 Carriage Bolt M8*P1.25*55MM (4)
F-2 Flat washer for Ø8*Ø19*2T (4)
F-3 Acorn Nut for M8 Bolt (4)
F-8 Wrench（1）

2

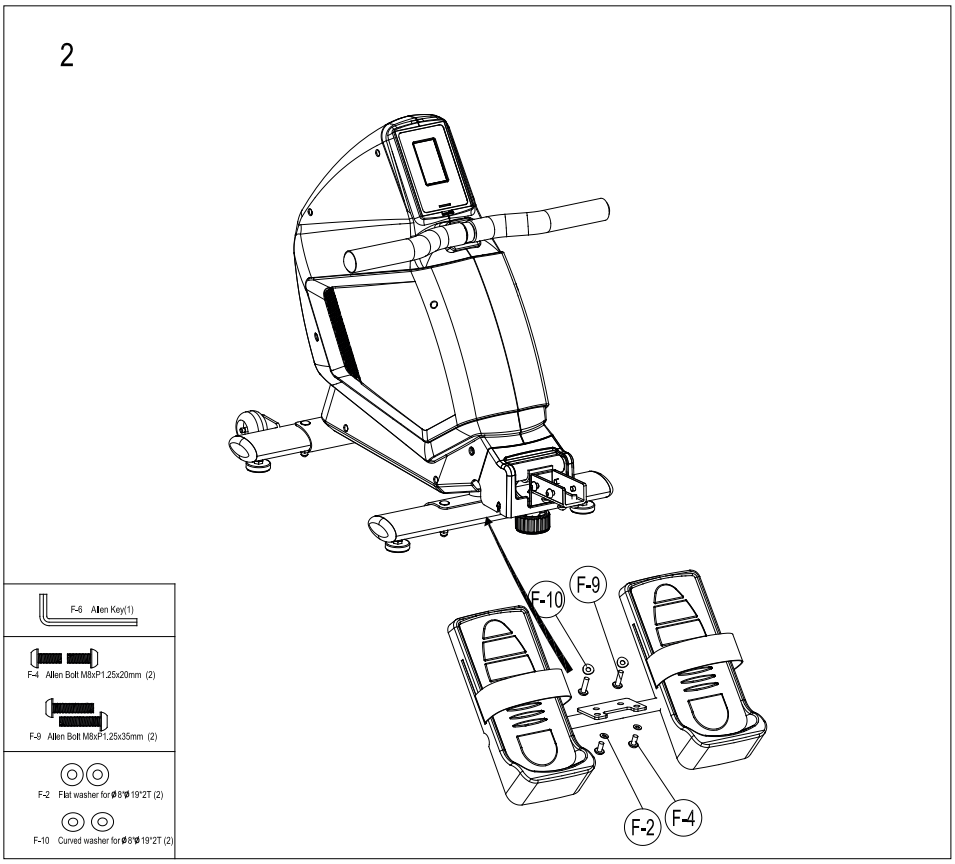
F-10
F-9
F-2
F-4
F-6 Allen Key(1)
F-4 Allen Bolt M8xP1.25x20mm (2)
F-9 Allen Bolt M8xP1.25x35mm (2)
F-2 Flat washer for Ø8*Ø19*2T (2)
F-10 Curved washer for Ø8*Ø19*2T (2)

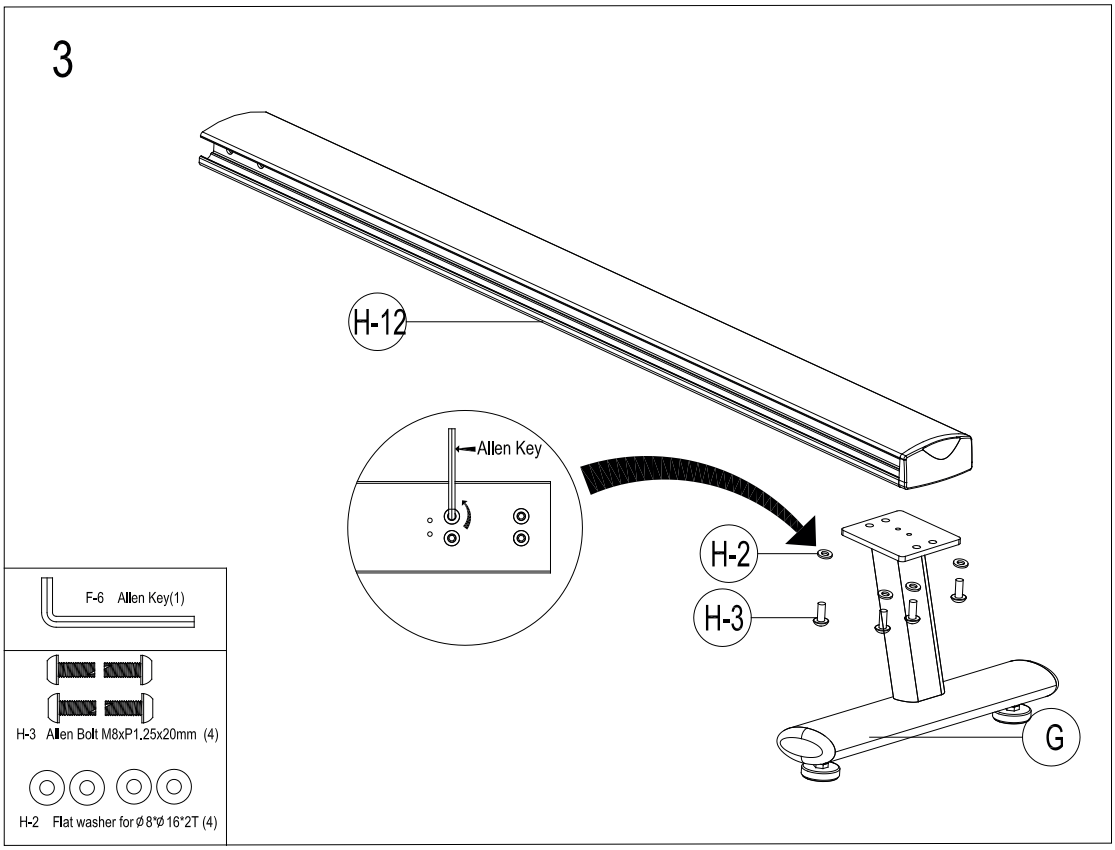
3
H-12
Allen Key
H-2
H-3
G
F-6 Allen Key(1)
H-3 Allen Bolt M8xP1.25x20mm (4)
H-2 Flat washer for Ø8*Ø16*2T (4)

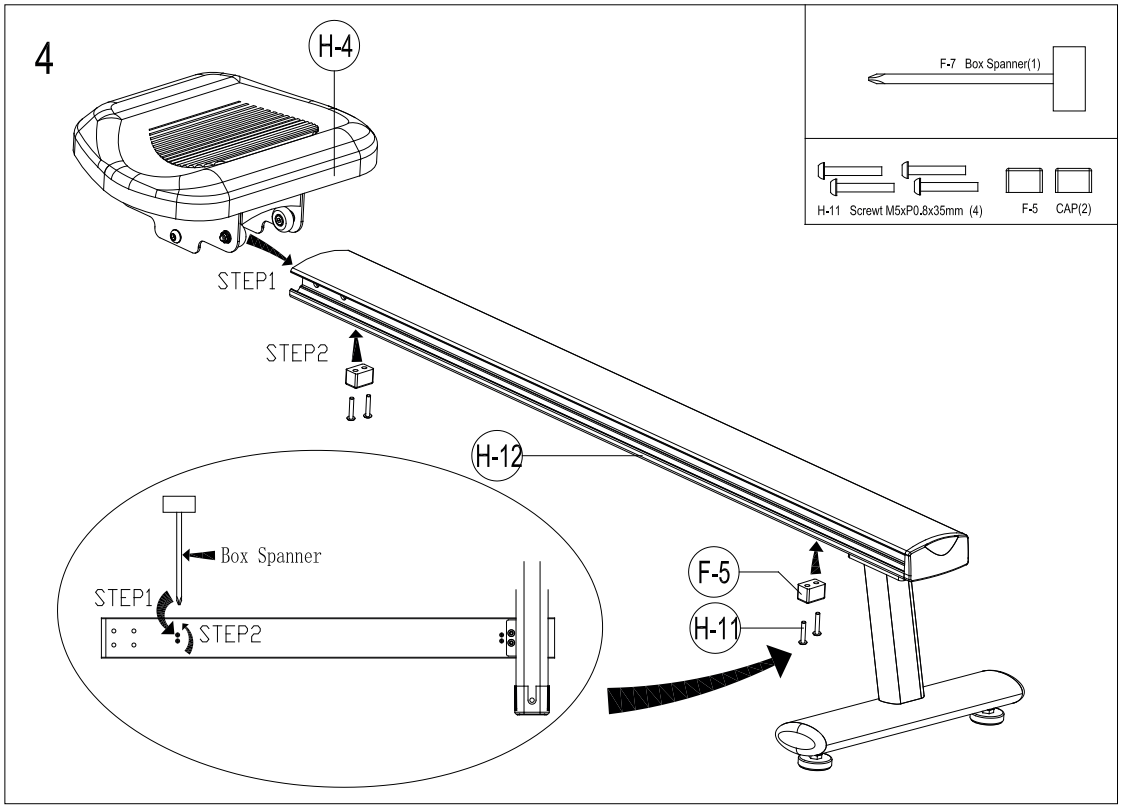
4
H-4
STEP1
STEP2
H-12
Box Spanner
STEP1
STEP2
F-5
H-11
F-7 Box Spanner(1)
H-11 Screwt M5xP0.8x35mm (4)
F-5
CAP(2)

5

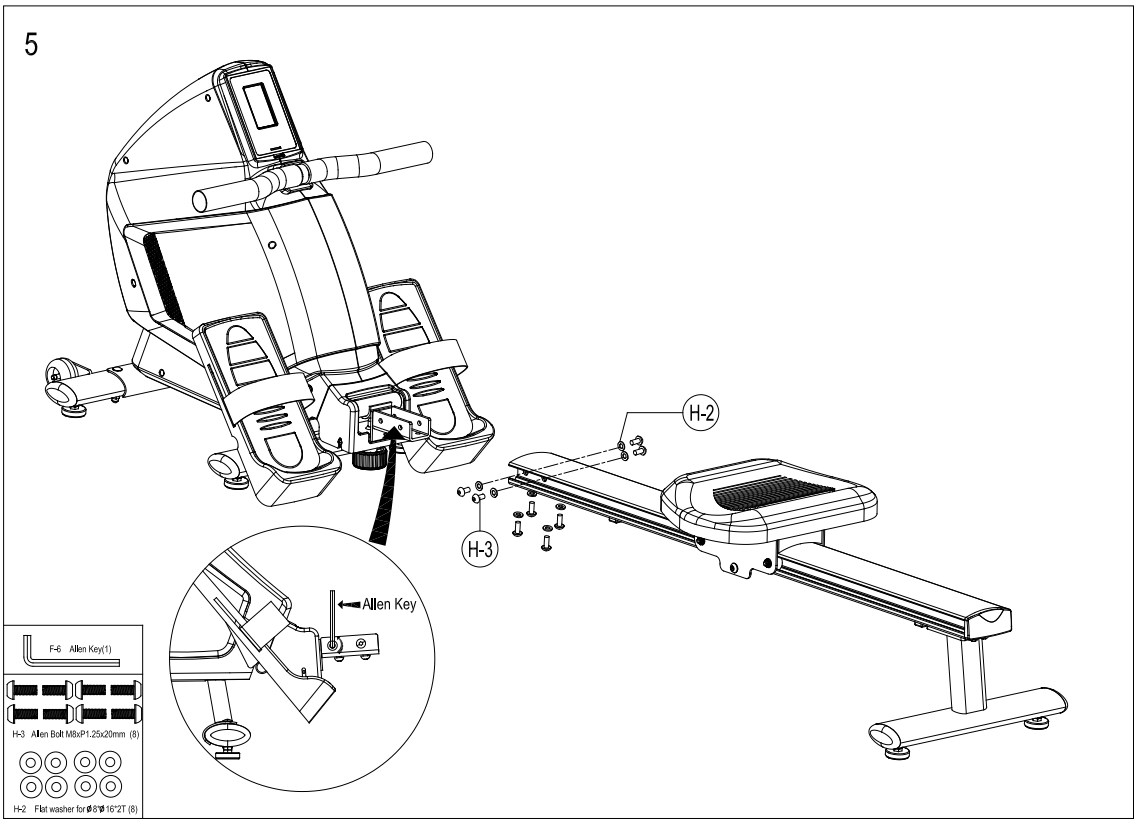
H-2
H-3
Allen Key
F-6 Allen Key(1)
H-3 Allen Bolt M8xP1.25x20mm (8)
H-2 Flat washer for ø8*ø16*2T (8)

6

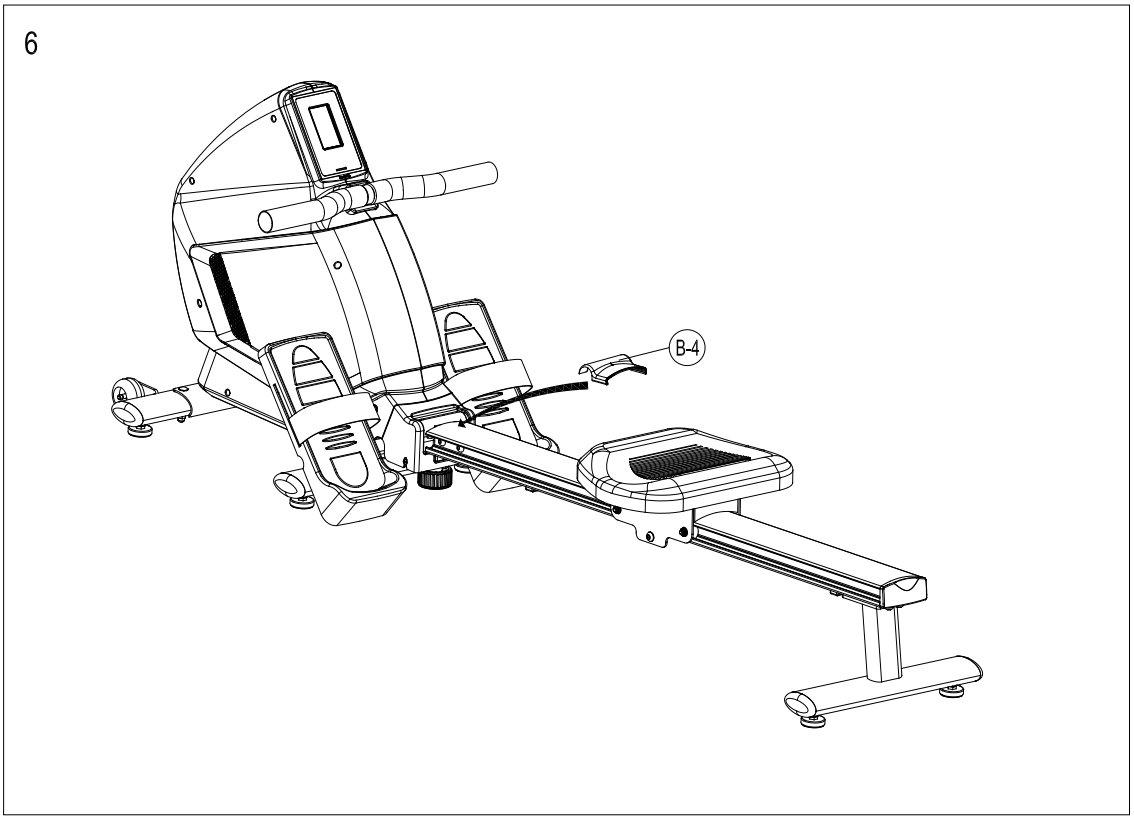
B-4

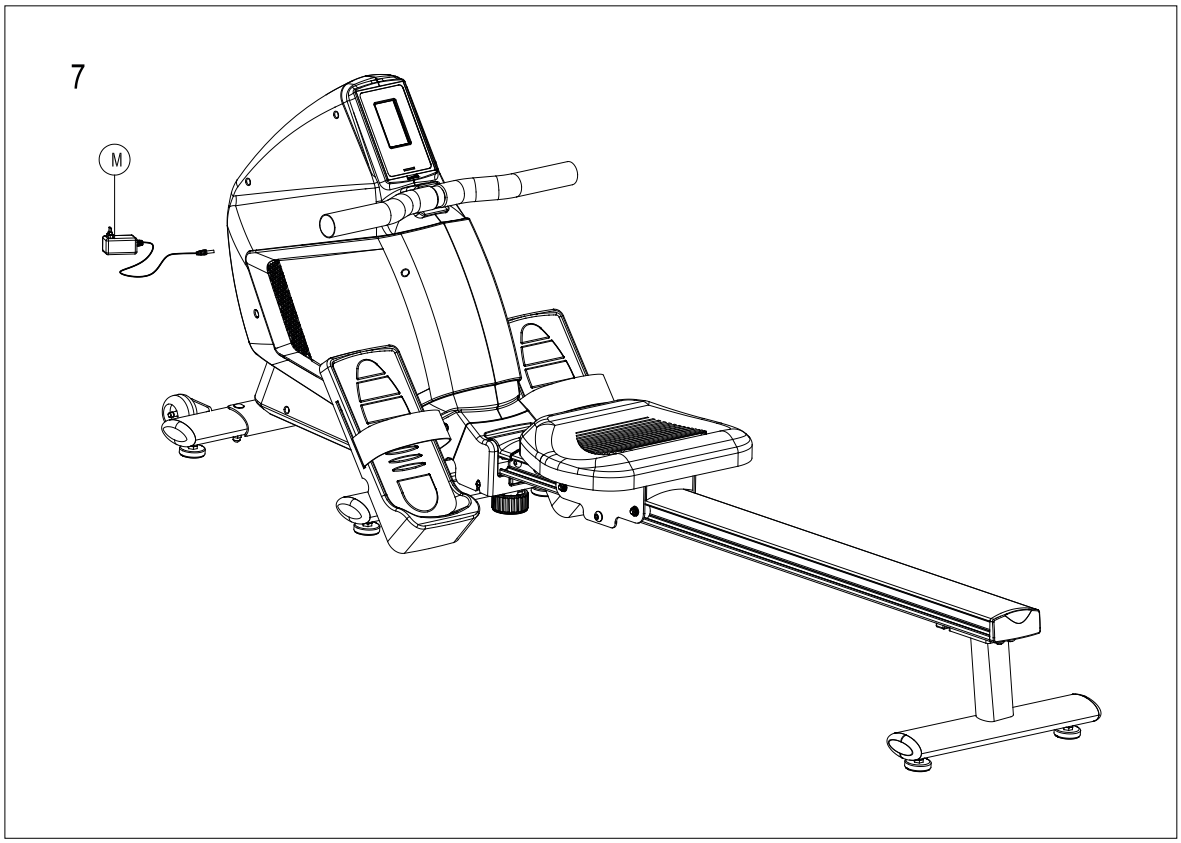
7
M

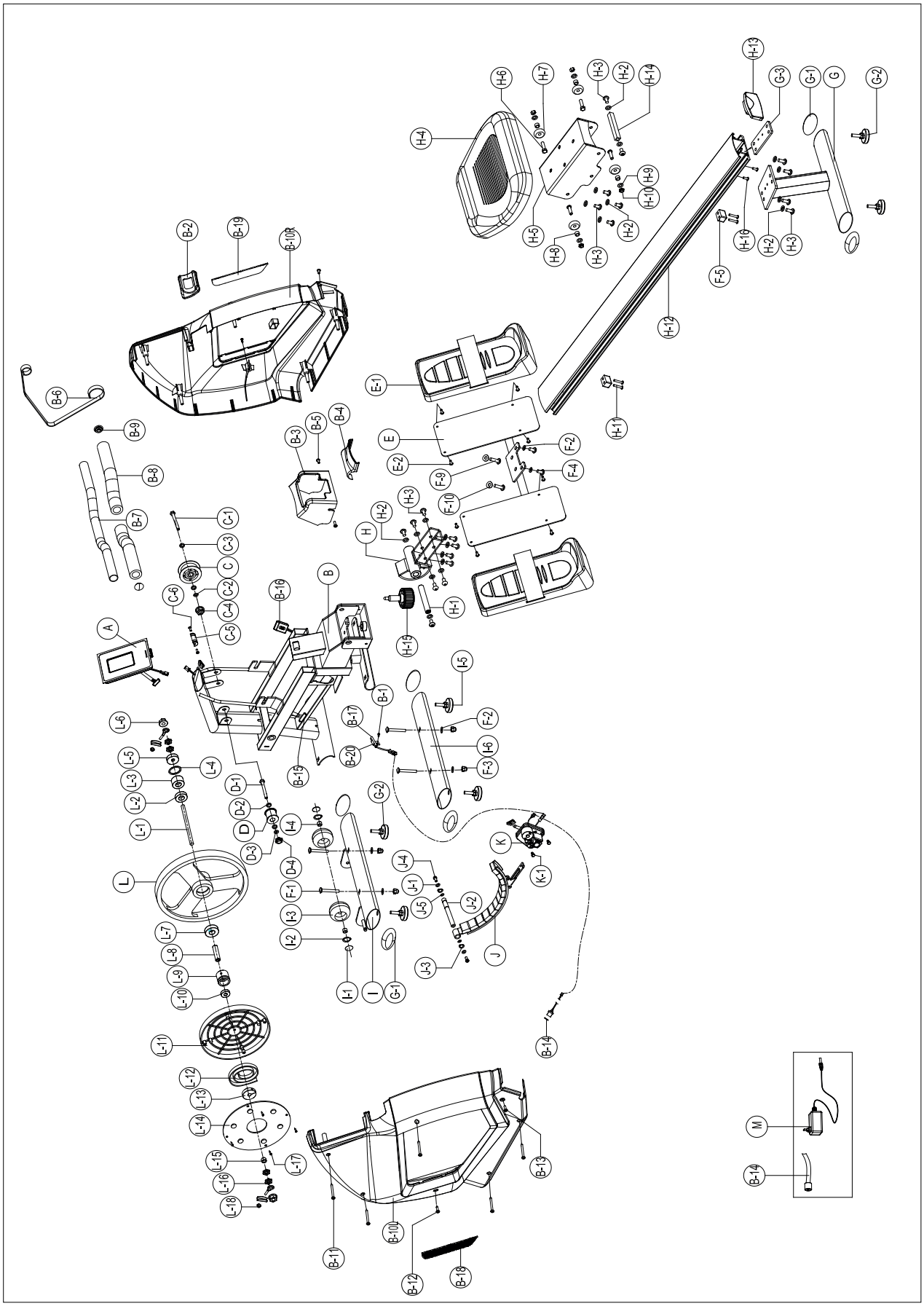
H-13
G-3
G-1
G
G-2
H-6
H-7
H-3
H-2
H-14
H-4
H-9
H-10
H-5
H-8
H-3
H-2
H-16
H-2
H-3
F-5
H-12
B-2
B-19
B-10R
B-6
B-9
B-8
B-7
E-1
E
E-2
F-9
F-2
F-4
F-10
H-11
B-3
B-5
B-4
H-3
H-2
H
H-1
H-15
C-1
C-3
C
C-2
C-4
C-5
C-6
B-16
B
A
I-5
B-1
B-17
B-20
B-15
F-2
I-6
F-3
L-6
L-5
L-4
L-3
L-2
L-1
D-1
D-2
D
D-3
D-4
I-4
G-2
K
K-1
J-4
J-1
J-5
J-2
J
J-3
L
F-1
I-3
I-2
I-1
I
G-1
L-7
L-8
L-9
L-10
L-11
L-12
L-13
L-14
L-15
L-16
L-18
L-17
B-14
B-13
B-10L
B-11
B-12
B-18
M
B-14

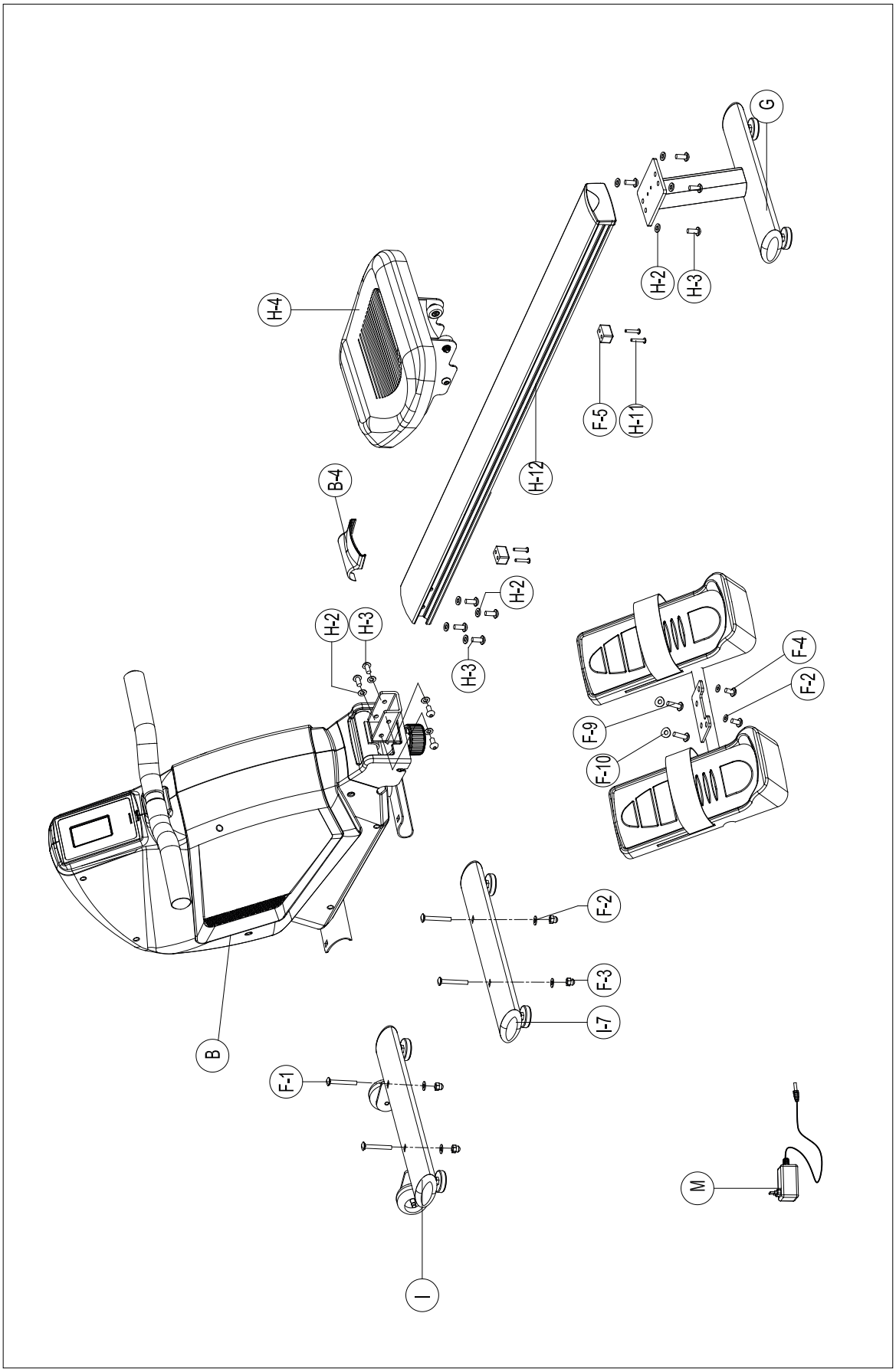
G
H-2
H-3
H-4
F-5
H-11
H-12
B-4
H-2
H-2
H-3
H-3
F-4
F-2
F-9
F-10
F-2
F-3
I-7
B
F-1
M
I

FOLDING AND TRANSPORT

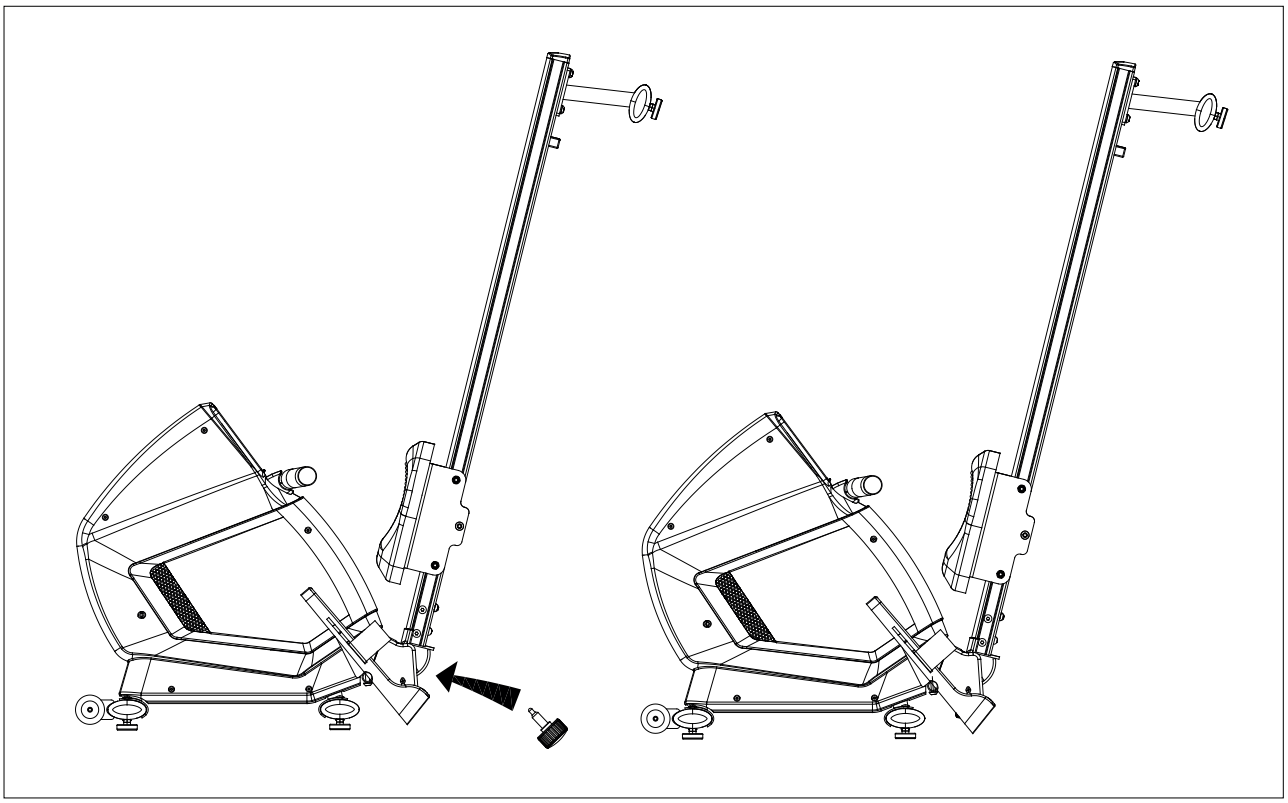

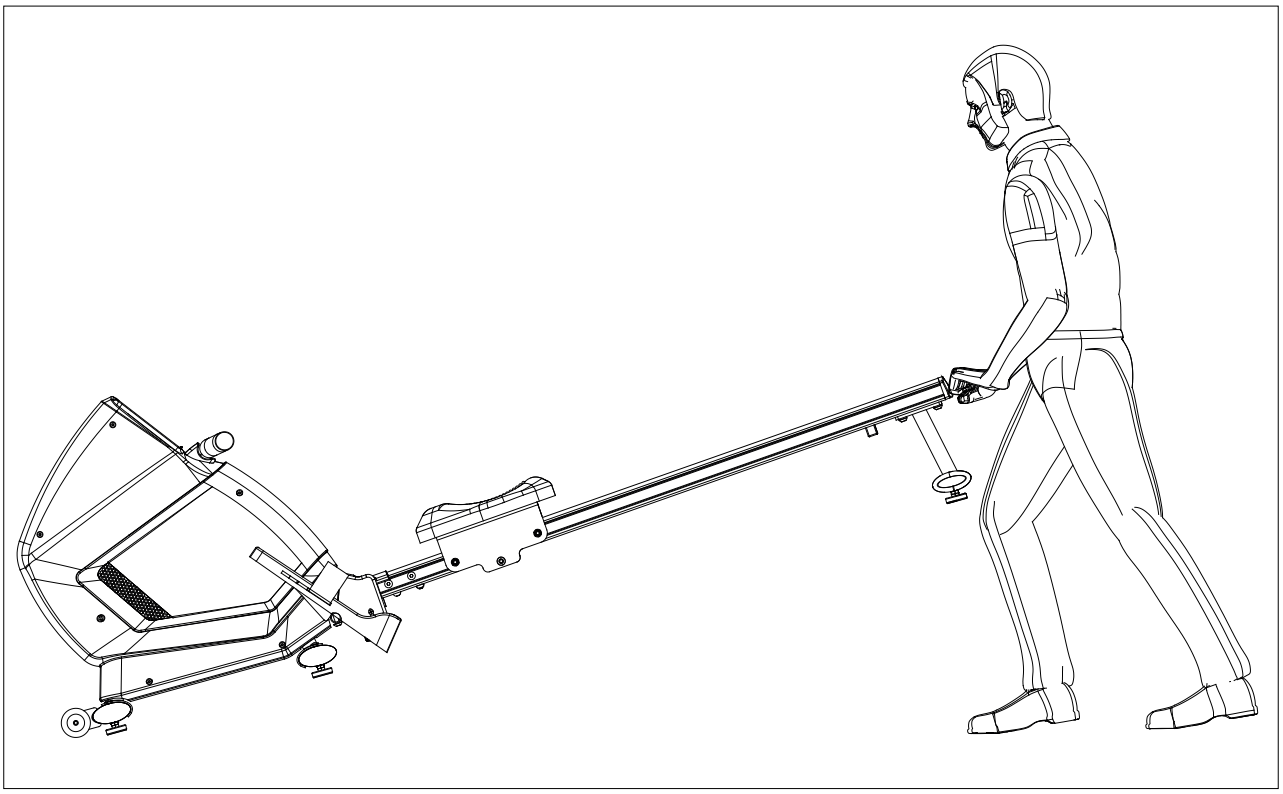

SPARE PARTS LIST

ONEGR SPARE PARTS LIST

ITEM	DESCRIPTION	EVB SPEC	Q'TY	
A	Console	PE-SM58950026402	1	SET
B	Main frame	MT-GR-RFW01-7002	1	PCS
B-1	Screw	PD-SDM20410-1041	1	PCS
B-2	Handlebar bracket	PL-P-PB6853-1024	1	PCS
B-3	Cover for folding mechanism (I)	PL-P-PB6288-1002	1	PCS
B-4	Cover for folding mechanism (II)	PL-P-PB6289-1002	1	PCS
B-5	Screw	PD-SWM20514-1002	2	PCS
B-6	Rowing belt	PK-P-PB5569-1000	1	PCS
B-7	Handlebar	PT-P-PB6262-1000	1	PCS
B-8	Foam grip for handlebar	PL-P-PB6264-1002	2	PCS
B-9	End cap	PL-P-PB6274-1002	2	PCS
B-10L	Chain cover (Left)	PL-CZR10R01-1002	1	PCS
B-10R	Chain cover (Right)	PL-CZR10R11-1002	1	PCS
B-11	Screw	PD-SBM20440-1041	5	PCS
B-12	Screw	PD-SBM20516-1241	2	PCS
B-13	Screw	PD-SWM20516-1041	2	PCS
B-14	DC wire	B3192-3B404003H2-000	1	PCS
B-15	Cable wire	B3192-CD10550CDA-000	1	PCS
B-16	Built in receiver	1PD-WP1002-9	1	PCS
B-17	Sensor box	B7030-D10200D6-560	1	PCS
B-18	Cap of chain cover (left)	PL-S-GR-R21-1024	1	PCS
B-19	Cap of chain cover (right)	PL-S-GR-R23-1024	1	PCS
B-20	Sensor fixed bracket	PE-P-PB4310-1000	1	PCS
C	Big roller	PL-P-PB2000L1000	1	SET
C-1	Screw	PH-P-PB2257-1000	1	SET
C-2	Flat washer	PD-WN221018-1041	1	SET
C-3	Bushing	PH-P-PB5649-1000	2	PCS
C-4	Nylon nut	PD-NNI21207-1041	1	PCS
C-5	Belt fixer	PL-P-PB5596-1000	1	PCS
C-6	Screw	PD-SBM20410-1041	2	PCS
D	Small roller	ML-P-PB2180-3400	1	SET
D-1	Hex. Screw	PH-P-PB2257-1000	1	PCS
D-2	Bushing	PH-P-PA-008-1000	2	PCS
D-3	Flat washer	PD-WN121018-1041	1	PCS
D-4	Nylon nut	PD-NNI21207-1041	1	PCS
E	Pedal plate set	MT-GR-RFW02-7002	1	SET
E-1	Pedal	PL-SZR10R62-1002	2	PCS
E-2	Screw	PD-SWM40512-1002	8	PCS
F	Hardware kit	AAZR10RFA04-9000	1	PCS
F-1	Carriage bolt	PD-SMM10855-1082	4	PCS
F-2	Flat washer	PD-WN220819-1082	6	PCS
F-3	Acron nut	PD-NCM20800-1082	4	PCS
F-4	Allen bolt	PD-SRM20820-1082	2	PCS
F-5	Cap	PL-P-PB2178L1002	2	PCS
F-6	Allen Key	PH-P-PA-085-1002	1	PCS
F-7	Box spanner	PH-P-PA-622-1000	1	PCS
F-8	Wrench	PH-P-PB-216-1000	1	PCS
F-9	Screw	PD-SRM40835-1002	2	PCS
F-10	Semi-washer	PD-WA240819-1002	2	PCS

G	Rear stabilizer set (incl. G-1~G-3)	MT-GR-RFW03-7002	1	SET
G-1	End cap for stabilizer	PL-P-PB5062-10U8	6	PCS
G-2	Adjustor cap	PL-P-PB6247-1002	4	PCS
G-3	Fixing plate for slider	PH-P-PB2190-1000	1	PCS
H	Slider bracket	MT-GR-RFW04-7002	1	PCS
H-1	Fixing axle for slider	PH-P-PB5462-1000	1	PCS
H-2	Flat washer	PD-WN220816-1041	20	PCS
H-3	Screw	PD-SRM20820-1041	20	PCS
H-4	Saddle	PS-P-PB5465-1302	1	PCS
H-5	Slider	MH-P-PB1892-7000	1	PCS
H-6	Hex. screw	PD-SHM20630-1002	4	PCS
H-7	Roller of saddle	PL-P-PB2003-1000	4	PCS
H-8	Bushing	PH-P-PB1893-1000	4	PCS
H-9	Flat washer	PD-WN120612-1041	4	PCS
H-10	Nylon nut	PD-NNM20600-1041	4	PCS
H-11	Screw	PD-SWM10535-1002	4	PCS
H-12	Aluminum rail	MTZR10RF015-4000	1	PCS
H-13	End cap of rail	ML-P-PB5449-1000	1	PCS
H-14	Axle for stopping slider	PH-P-PB1891-1041	1	PCS
H-15	Seat knob	PD-P-PB6933-1002	1	PCS
H-16	Screw	PD-SWM20516-1041	2	PCS
I	Front stabilizer set (incl. I-1~I-5)	MTZR10RFW05-7002	1	PCS
I-1	Nut	PD-NQM10800-1002	2	PCS
I-2	C type ring	PD-KC010800-1002	2	PCS
I-3	Transportation Wheel	PL-P-PB3031-1002	2	PCS
I-4	Bushing	PH-P-PB3112-1000	2	PCS
I-5	Adjustor cap	PL-P-PB6247-1002	2	PCS
I-6	Middle stabilizer set (incl. I-1~I-5)	MTZR10RFW06-70Z5	1	PCS
J	Magnetic set	AA-A-PA3067-9100	1	PCS
J-1	Flat washer	PD-WN120613-1041	2	PCS
J-2	Axle for fixing magnetic bracket	PH-P-PB5461-1000	1	PCS
J-3	C type ring	PD-KC011200-1002	2	PCS
J-4	Screw	PD-SOM60612-1041	2	PCS
J-5	Wave washer	PD-WD061218-1002	2	PCS
K	Motor set	AA-A-PA1951-9005	1	SET
K-1	Screw	PD-SHM20610-1041	2	PCS
L	Flywheel SET	PH-FAD28032L1002	1	PCS
L-1	Axle for flywheel	PH-P-PB5460-1002	1	PCS
L-2	6003RS bearing	PH-BA2-6003-1000	1	PCS
L-3	One way bearing set	PH-P-PB3485-1000	1	PCS
L-4	Flat washer	PD-WN113034-1002	1	PCS
L-5	6300RS bearing	PH-BA2-6300-1000	1	PCS
L-6	Nut	PD-NKI21200-1041	2	PCS
L-7	6203 bearing	PH-BA2-6203-1000	1	PCS
L-8	Axle for spring box II	PH-P-PB1575-1000	1	PCS
L-9	Axle for spring box I	PH-P-PB1460-1000	1	PCS
L-10	6000RS bearing	PH-BA2-6000-1000	1	PCS
L-11	Spring box set	ML-P-PB1450L3400	1	PCS
L-12	Spring	PH-P-PB1461-1000	1	PCS
L-13	Fixing cap for spring	PH-P-PB-502-1082	1	PCS
L-14	Cover for spring box	PL-P-PB1451L1000	1	PCS
L-15	Bushing	PH-P-PA-185-1000	1	PCS
L-16	Nut	PD-NNI21224-1041	4	PCS
L-17	Screw	PD-SBM10412-1002	4	PCS
L-18	Adjustor	PD-SJM20645-9082	2	PCS
M	Switching power adaptor	PE-P-PB6829-1000	1	SET

REEBOKFITNESSEQUIPMENT.COM/PRODUCTSUPPORT

Reebok
ONE SERIES