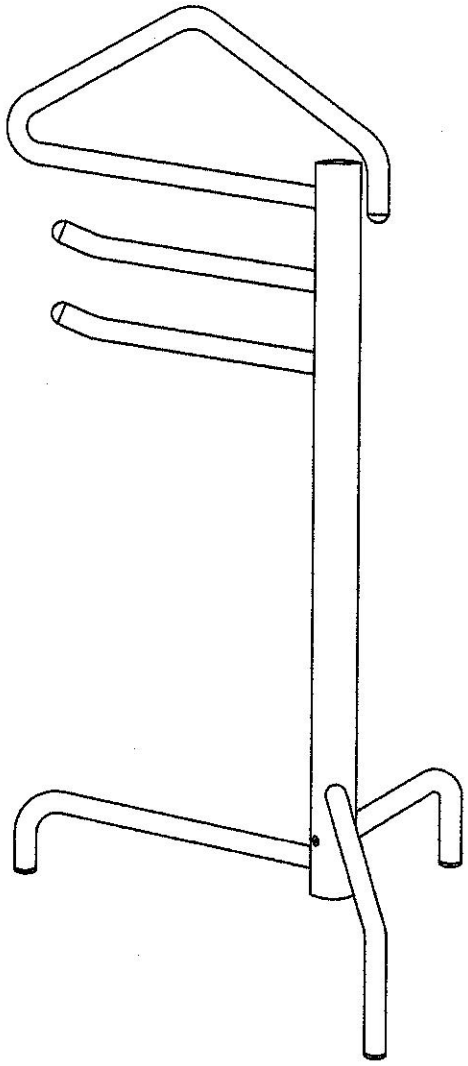

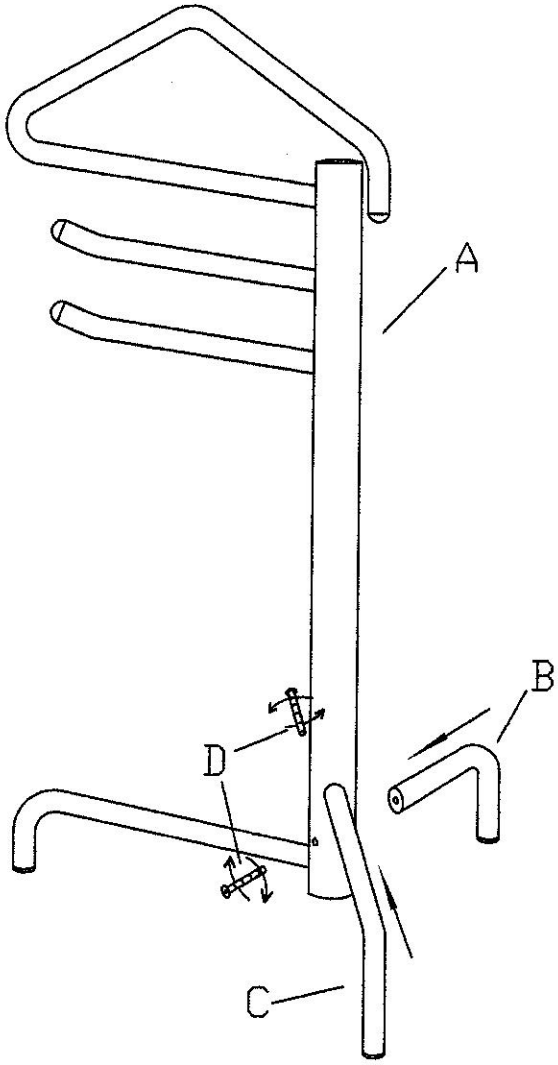
A
B
D
C

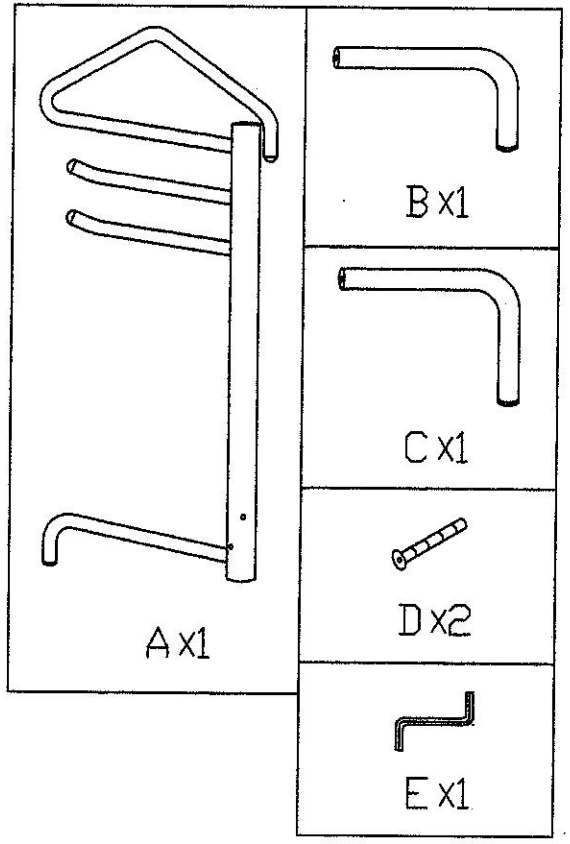
B x1
C x1
D x2
A x1
E x1